THALASSA 600XGBK
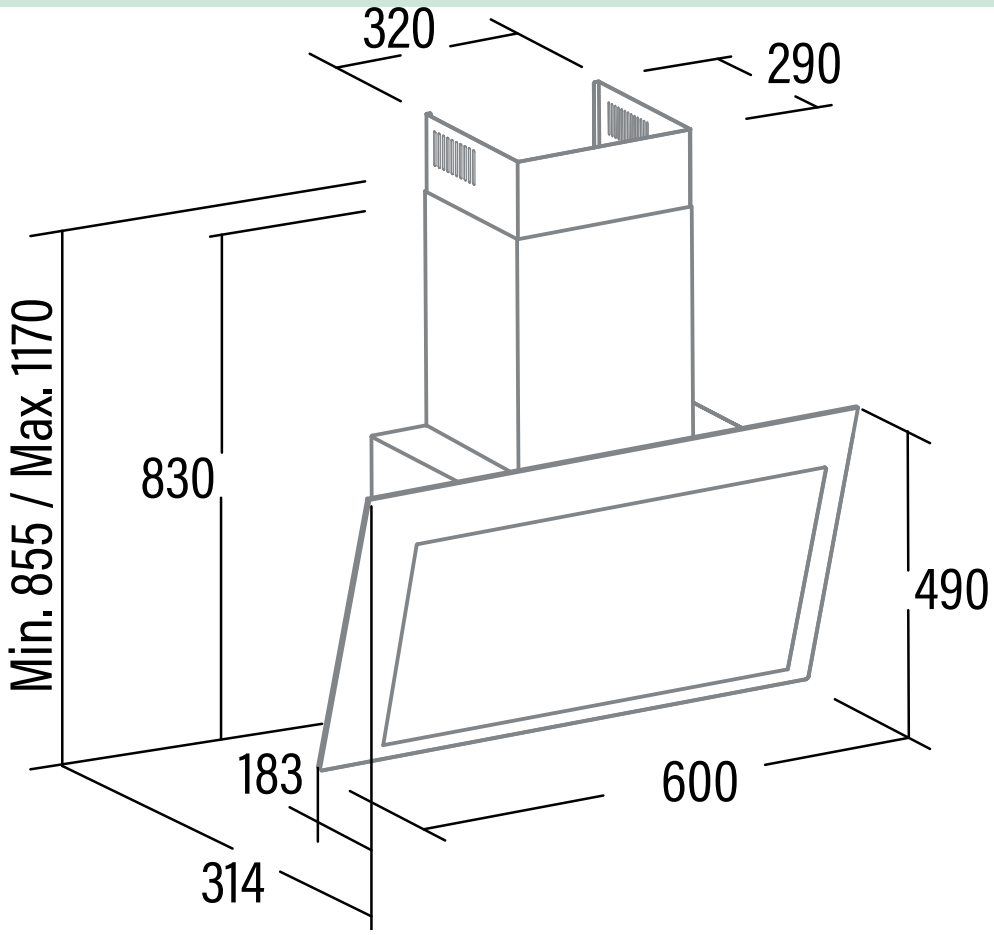
Cod.: **02127211** EAN: **8422248104814**